OMEC NORTH AMERICA INC

OMEC MOTORS
MAKE THE WORLD MORE EFFICIENT
OUR MOTION IS YOUR PROFITS

NEMA Motor

		Drawing No.	
Customer :			
Client reference:			
Type:	184T-6 2HP		
Brand :	OMEC		

TYPICAL MOTOR PERFORMANCE DATA

HP	kW	Pole	FL RPM	Frame	Voltage	Hz	Phase	FL Amps
2	1.5	6	1180	184T	230/460	60	3	5.74/2.87
Enclosure	**IP**	**Ins.Class**	**S.F.**	**Duty**	**NEMA Nom. Eff.**	**NEMA Design**	**kVA Code**	**Ambient (℃)**
TEFC	55	F	1.15	CONT	88.5	B	L	40

Load	HP	kW	Amperes	Efficiency (%)	Power Factor
Full Load	2	1.5	5.74/2.87	88.5	0.73
Locked Rotor			50（230V）		

Torque			Rotor wk^2 Inertia ($ib\text{-}ft^2$)
Full Load (lb-ft)	Locked Rotor (% FLT)	Break Down (% FLT)	
9.0	150	250	

Safe Stall Time(s)		Sound Pressure dB(A)@1M	Bearings		Approx. Motor Weight (lbs)
Cold	Hot		DE	NDE	
			6206 2ZC3	6205 2ZC3	

*Bearings are the only Recommended spare part(s).

Motor Options:

Edition

Performed	Checked	Date

Item	Changes	Performed	Checked	Date

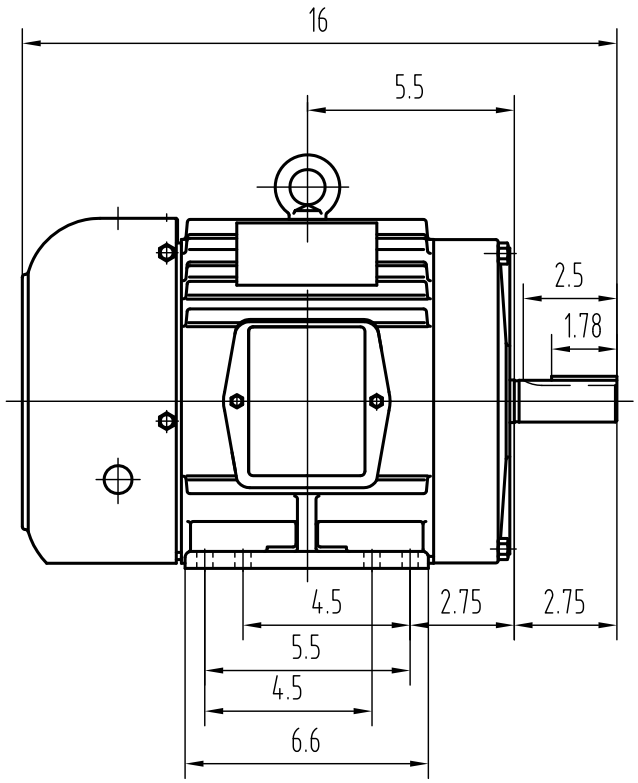

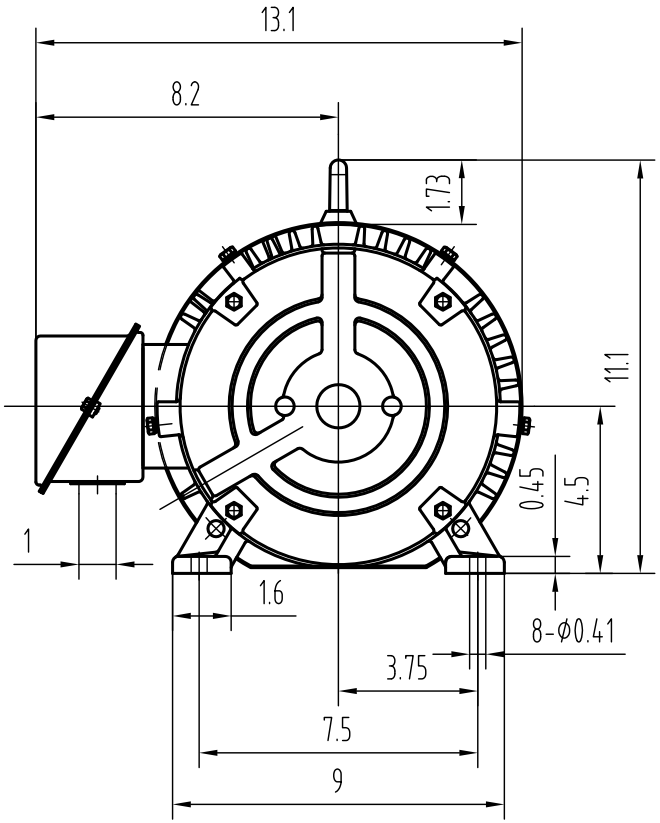

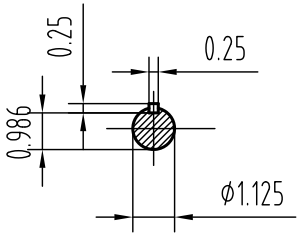

Mark	No.	Zone	Changed file No.	Signatuce	Date

Design			Standard		
Check					
Auditing					
Technics			approval		

Sign	Weight	Scale
		1:5
Total page	page No.	

TEFC 182/184T

OMEC MOTORS
MAKE THE WORLD MORE EFFICIENT
OUR MOTION IS YOUR PROFITS

OMEC NORTH AMERICA INC

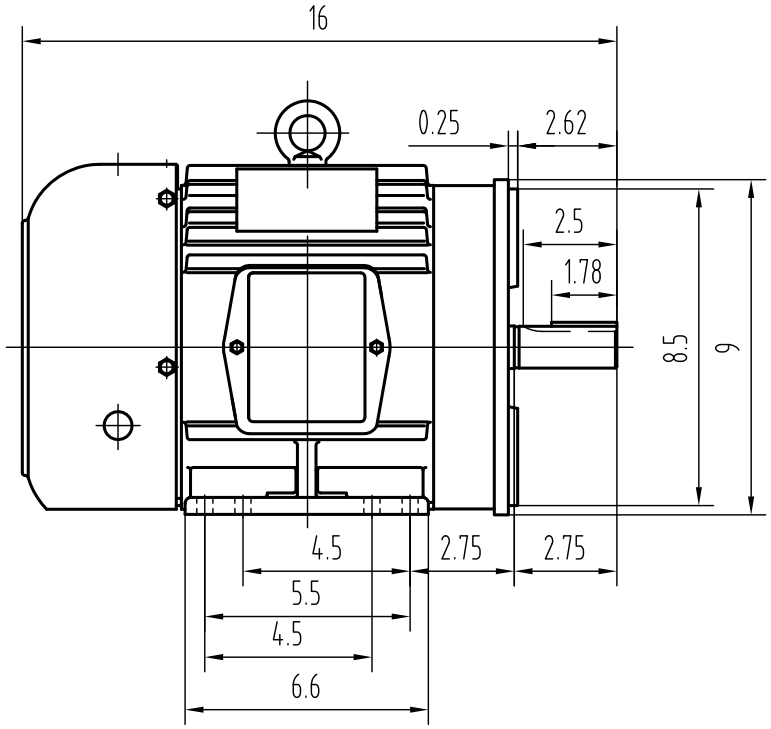

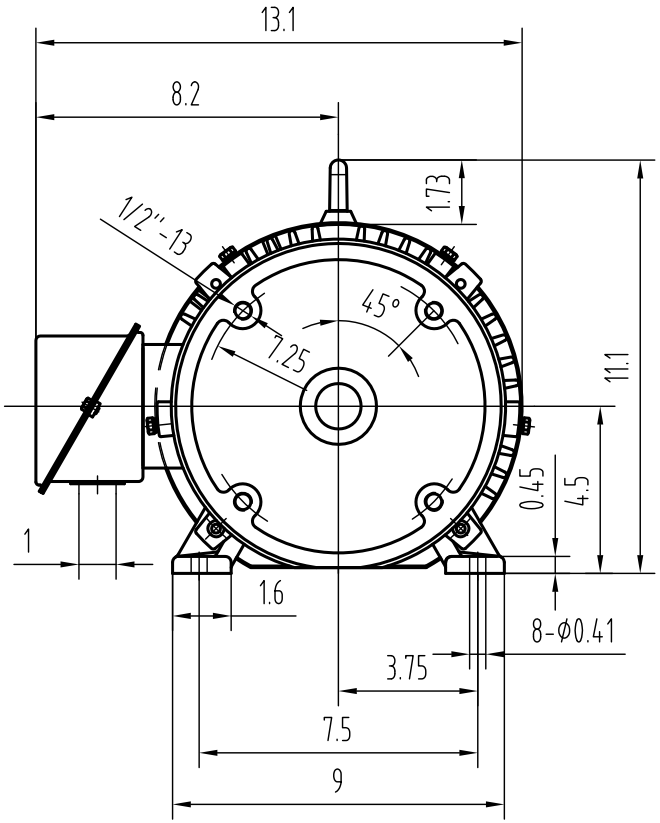

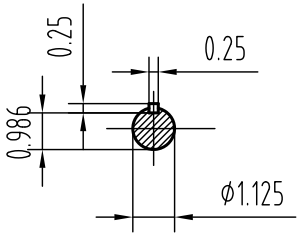

Mark	No.	Zone	Changed file No.	Signatuce	Date

Design			Standard		
Check					
Auditing					
Technics			approval		

Sign	Weight	Scale
		1:5
Total page	page No.	

TEFC 182/184TC

OMEC MOTORS
MAKE THE WORLD MORE EFFICIENT
OUR MOTION IS YOUR PROFITS

OMEC NORTH AMERICA INC